Brower®

800-553-1791 FAX: 319-469-4402
Houghton, Iowa 52631 USA
www.browerequip.com

100% ENERGY FREE LIVESTOCK WATERERS

*Simple Installation (No Heat Well Needed) * Attractive Design * Animal Friendly Flaps*

Nature's ground water temperature does the job. Our energy-free waterers operate like a thermos all year long. Cool, fresh water in summer's hot sun. Dependable water in sub-zero temperatures.

Model MPM10 is identical to Model MPM10A except the MPM10 flaps are 2 inches shorter than those of the MPM10A and also MPM10 flaps have stainless guards.

Model MPM10
Swine

Model MPM10A
Calves, Poultry and Sheep
For Poultry, invert flaps.

Model MPM20
Cattle, Horses, Elk
and other Wildlife

CHECK THESE BROWER QUALITY FEATURES:

1. Stainless steel bolts and removable top afford easy access to plumbing. Optional wing bolts (Model OF403WB) are available for grade A inspections.
2. Unique baffles guard against icing and keep valve operating under severest conditions.
3. Notched flanges for easy anchoring.
4. Achieve a quality installation with Brower anchor package. Order Model 383344 which contains 4 anchor bolts, 4 flat washers, 4 plates and 4 nuts, all stainless steel.
5. Weather strip and an insulated sleeve for the supply line come with each unit.
6. Simple installation - no heat well needed; use an 8-12 inch tile; can be fitted on most existing pads.
7. Sealed bottom keeps out moisture and rodents.
8. Two 2-inch drain holes for fast cleanout.
9. Foam insulation between walls has an R-value of 7.14 inch.
10. Double wall construction contains hindered amine light stabilizer, the most effective ultraviolet inhibitor.
11. Seamless sidewall cannot leak.
12. Tolerance to water level - you don't have to worry about summer and winter water levels. (If the water level is too high on a ball or float type closure, closures can stick.)
13. Dependable, nonsiphoning valve - proven and trouble free.
14. Animal friendly insulated flaps. Livestock can drink out of both flaps at the same time - not always so with a ball closure. No pulleys and cables to foul and rust.

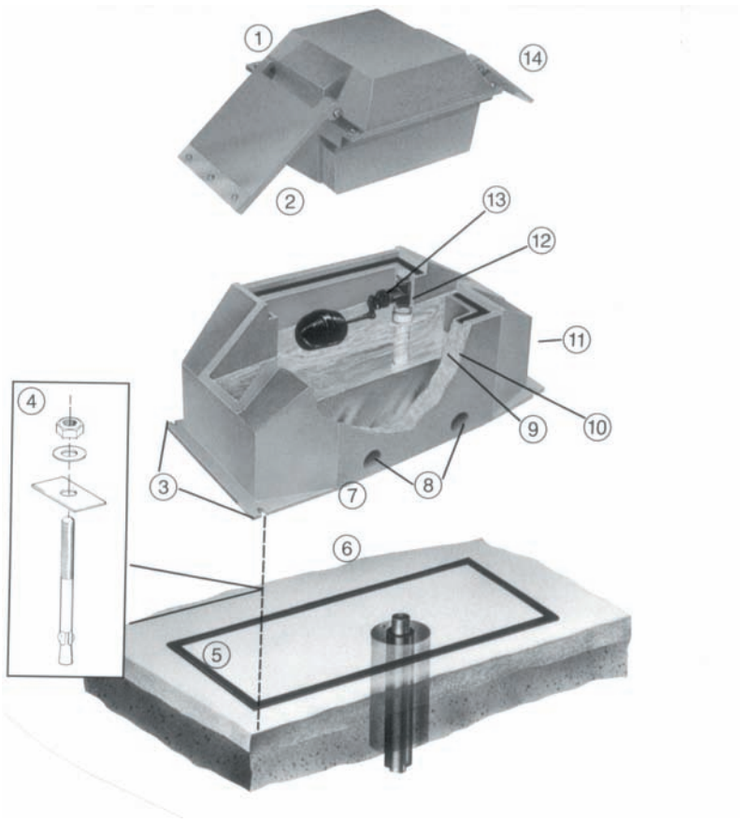

Brower®

800-553-1791 FAX: 319-469-4402
Houghton, Iowa 52631 USA
www.browerequip.com

WHY OUR FLAP IS BETTER THAN A BALL OR FLOAT CLOSURE...

Each time an animal drops our flap, water and ice explode off the surface - greatly reducing ice buildup.

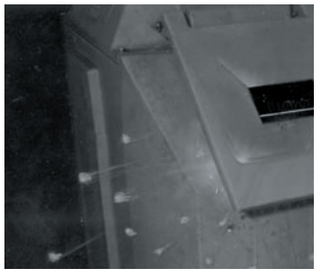

Our BROWER DRINKERS have no recessed areas where water can collect and freeze.

We unconditionally guarantee that livestock can operate our flaps as easily as they can operate a ball or float closure. Flaps on all units are quickly reversible to train cattle, sheep, horses, and wildlife. They can also be tied open. Training usually takes 24-48 hours and often is not needed at all. Hogs do not need to be trained. We have game bird growers who have very successfully used our energy free waterers. Write for information.

SUGGESTED ROUTINE:

Day 1 Reverse two flaps

Day 2 Lower one flap

Day 3 Lower all flaps

HOW THEY WORK...

Heat energy is provided by ground water entering the drinker between say 40 degrees F and 56 degrees F. Brower waterers are heavily insulated to hold the heat provided by ground water. As further protection, unique, patented baffles isolate drinking water from the main energy storage body under the valve cover. Drinking activity replenishes heat gradually lost. The minimal winter drinking activity needed should result in water being replaced twice a day (10-15 animals depending on drinker capacity, size of animals, and whether or not the drinker is sheltered). If entering water is less than about 40° F, such as water from a pond, mountain spring water or colder ground water, you may experience icing in the drinker openings.

PRECAUTIONS YOU SHOULD OBSERVE...

The key to trouble-free use is carefully read the installation instructions. You can probably use an existing tile if your supply line has stayed open with no supplemental heat. The new installation must be made without the supply line touching the riser tile and there must be no debris or dirt in the riser tile. For best protection, we recommend that a new riser tile of at least 8” diameter be installed. There must be an airtight seal to the mounting pad. Brower units need to be installed on the level. There must be sufficient drinking activity.

ENERGY FREE SPECIFICATIONS

Shipping Model No.	Capacity	Approx. Animal Capacities	Drinking Height	Drinking Opening	Overall Dimensions Width	Length	Height	Weight
MPM10	10 gal.	100 hogs	10 3/4”	7’ x 7 1/2”	19”	38”	20”	62 lbs.
MPM10A	10 gal.	100 sheep 100 calves	10 3/4”	7’ x 7 1/2”	19”	38”	20”	61 lbs.
MPM20	20 gal.	150 beef 60 dairy	18 1/2”	7 1/2’ x 8”	20”	38”	28”	78 lbs.

WPM120 Stainless Mud Grate and WPM118 Stainless Guard are recommended where MPM10 is used with sows (1 each required per opening).

All units are shippable via UPS.

Model VP124 valve is used in each waterer. For exact base dimensions and attachment locations, ask for publication ISHWPM. Animal capacities are an estimate only. We do not warrant that the capacities shown will apply to a specific operation. Consult with your extension agent or other qualified person if in doubt about number of animals serviced. U.S. patent numbers 321,769; 332,336; 322,869; 3,877,482; 4,100,885; 4,542,715; 4,708,091; 4,962,730, 5,105,711 and RE 34,427. Canadian patent number 2,017,662.